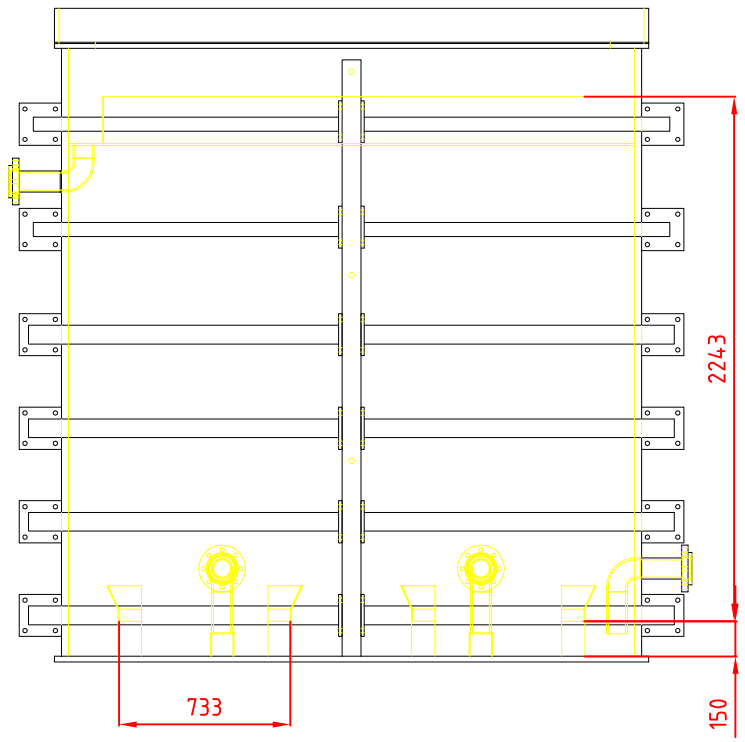

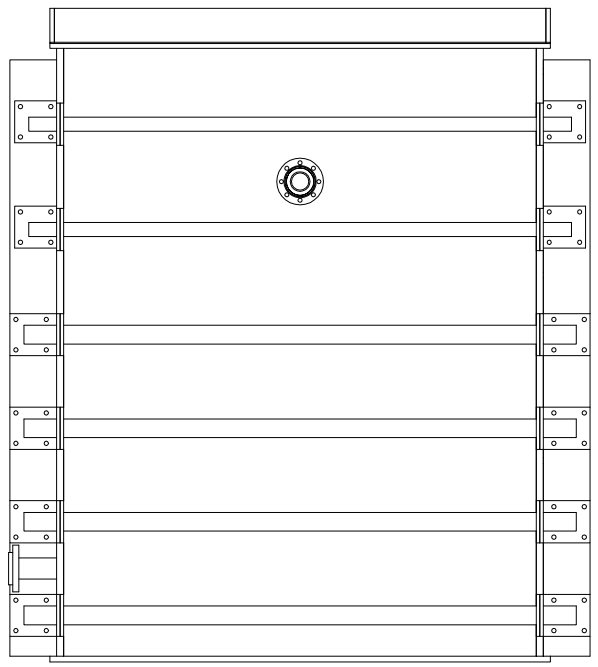

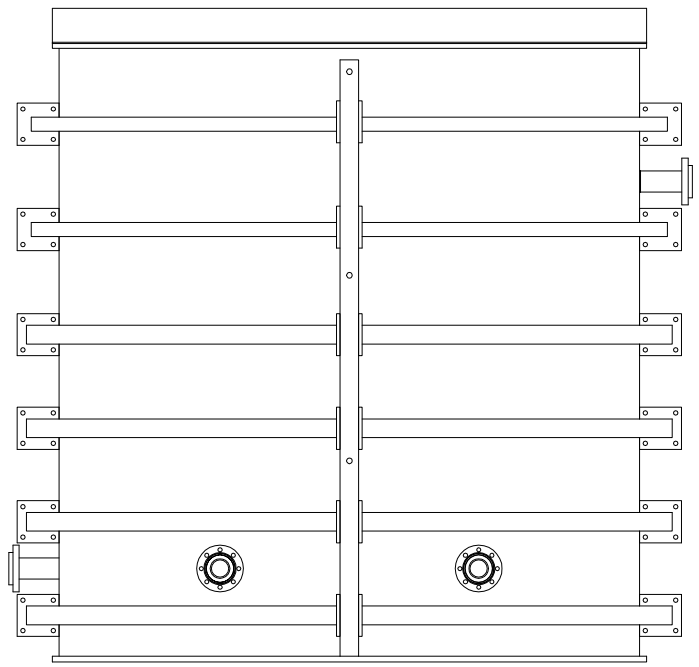

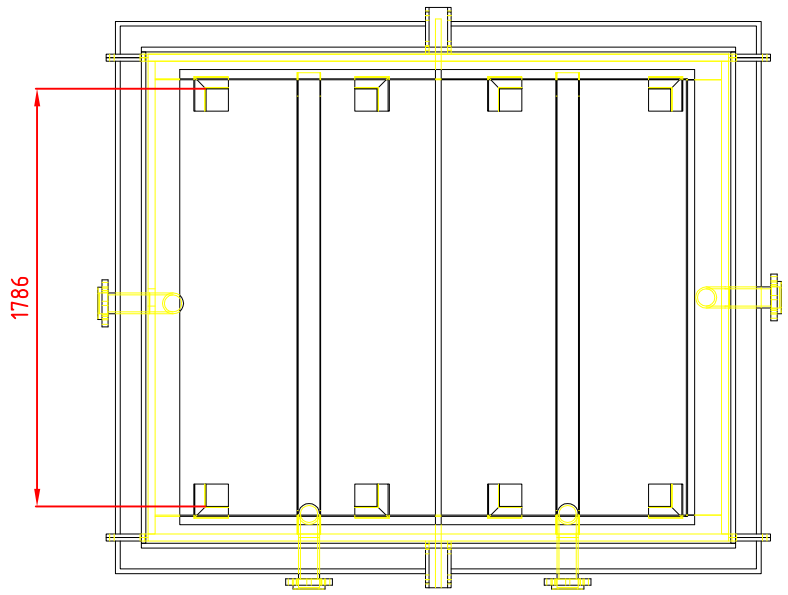

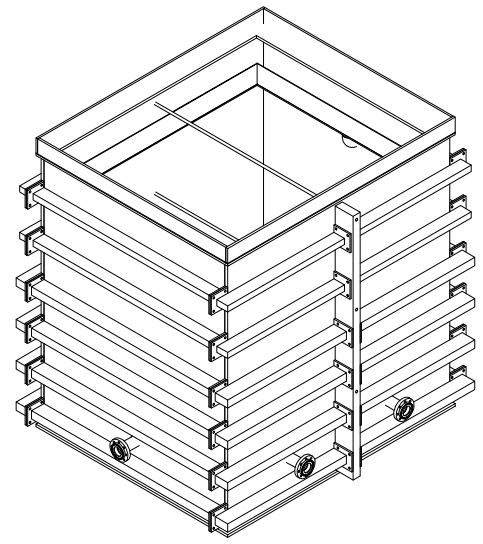

COMPANY CONFIDENTIAL
This information is properaty of V T, and is furnished for use of the assigned recipient only. No copies are to be made and the material contained herein is not to be divulged to others, either within or outsdie without specific approval of an officer of

SCALE	3rd ANGLE PROJECTION	PAPER SIZE	PRINTED
1/30 (%)		A3 (420 x 297)	BY SAUCUK ON 31/05/2010

REV	DESCRIPTION	DATE	DRW	CHK	APR	SIGN.

TITLE

SGA DRAWING
MEMBRANE TANK FOR
2 x ZW500C 22

ITEM N° n.v.t.	DRAWING N° n.v.t.		
PROJECT MBR UNIT			Page (Pages)
FILE TAG GA-C081097_MEM TANK_REV 2			1
PROJ.-ID C081097	CLIENT ORVAL		(1)